RENOWNED KNOW-HOW
Automation Technology

RK ROSE+KRIEGER
A Phoenix Mecano Company

EP(X)-II 30/40

The new performance class with trapezoidal- and ball screw drive

03/2022

EP(X)-II 30/40 twin tube actuator

The latest generation of twin tube units

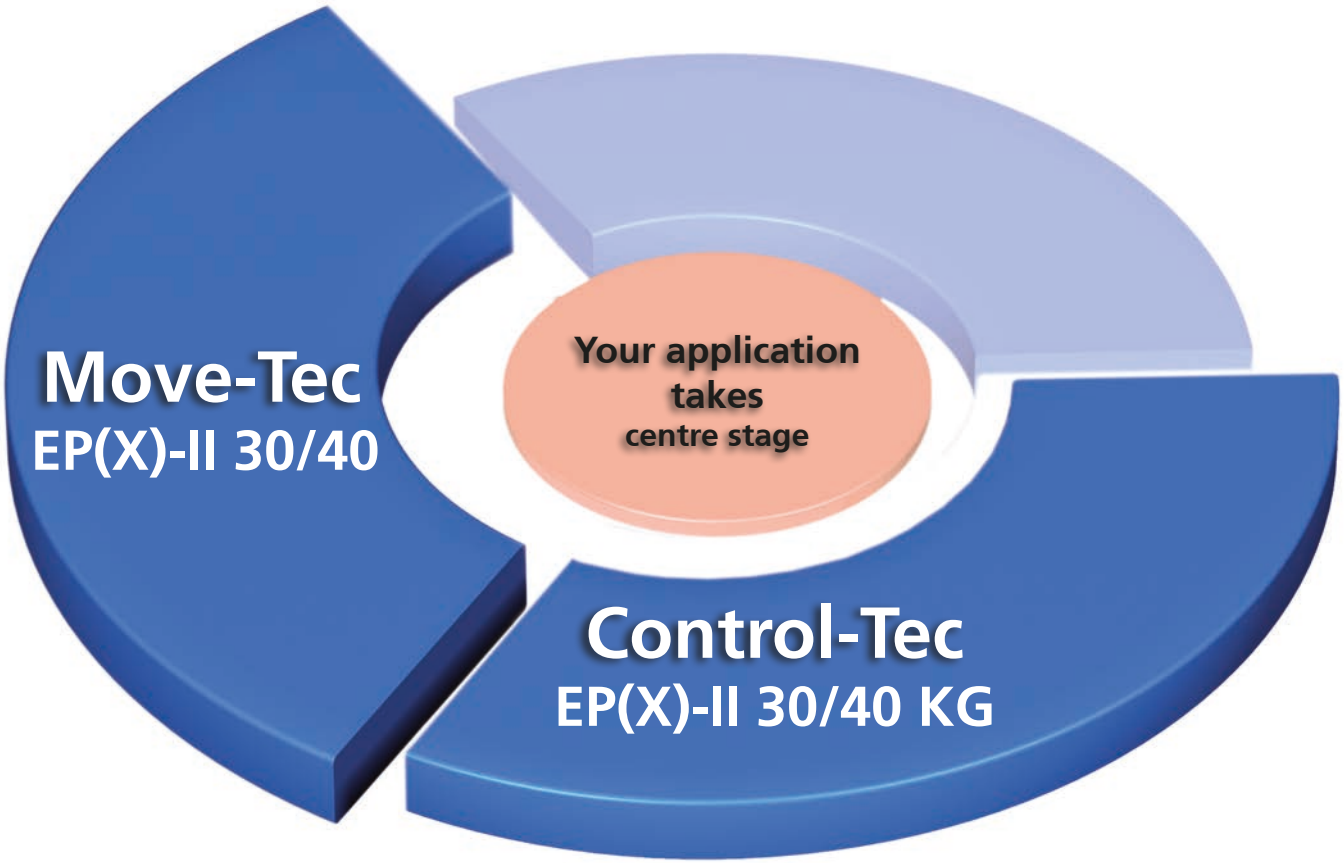

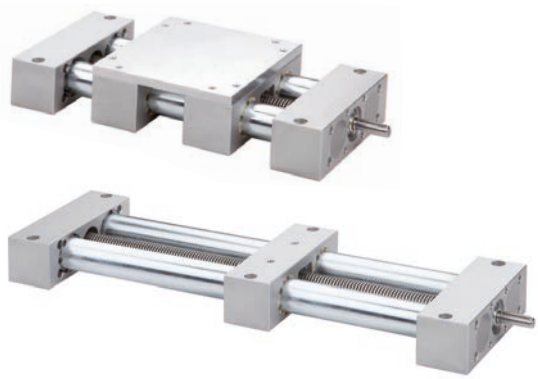

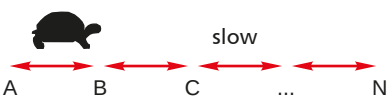

Features:

- Manual or electric drive
- Occasional to multiple adjustments daily
- Low duty cycle
- Low speed
- Medium to high stability
- Width, length and height adjustment

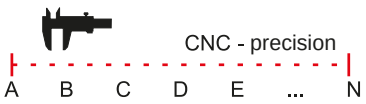

Features:

- High positioning accuracy
- Uniform motion
- High drive stiffness
- 3 shift operation
- IP 40 protected

RK ROSE+KRIEGER

EP(X)-II 30/40 tubular linear unit – Table of contents

Properties/performance data

- General information / operating conditions 6
- Load data 6
- Geometric moments of inertia 6

Versions
(Dimensions, order numbers)

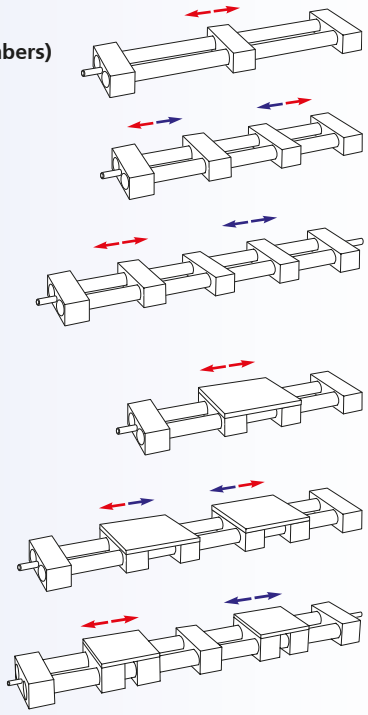

- EP-II 30/40 right or lefthand thread 10
- EP-II 30/40 right and lefthand thread 12
- EP-II 30/40 split screw 14
- EPX-II 30/40 right or lefthand thread 16
- EPX-II 30/40 right and lefthand thread 18
- EPX-II 30/40 split screw 20
- EPX-II 30/40 KG right thread 22

Accessories

Drive

- Handwheel 28
- Chain wheel 29
- Timing-belt pulley 29
- Angle drive 30
- Flange bearing unit 33
- Transmission unit 33
- Motor adapter / coupling 37

Position determination

- Positioning indicator 38
- Limit switch 39

EP(X)-II 30/40 tubular linear unit

The latest generation of EP(X)-II 30/40 twin tube units – compensates for high bending moments during hand and motor-driven adjustments

Precise / plane mounting surface
✓ Distortion-free installation

Bellows
✓ Protection class IP 40

Integrated spindle clamping
✓ Manual force locking
spindle clamping optional

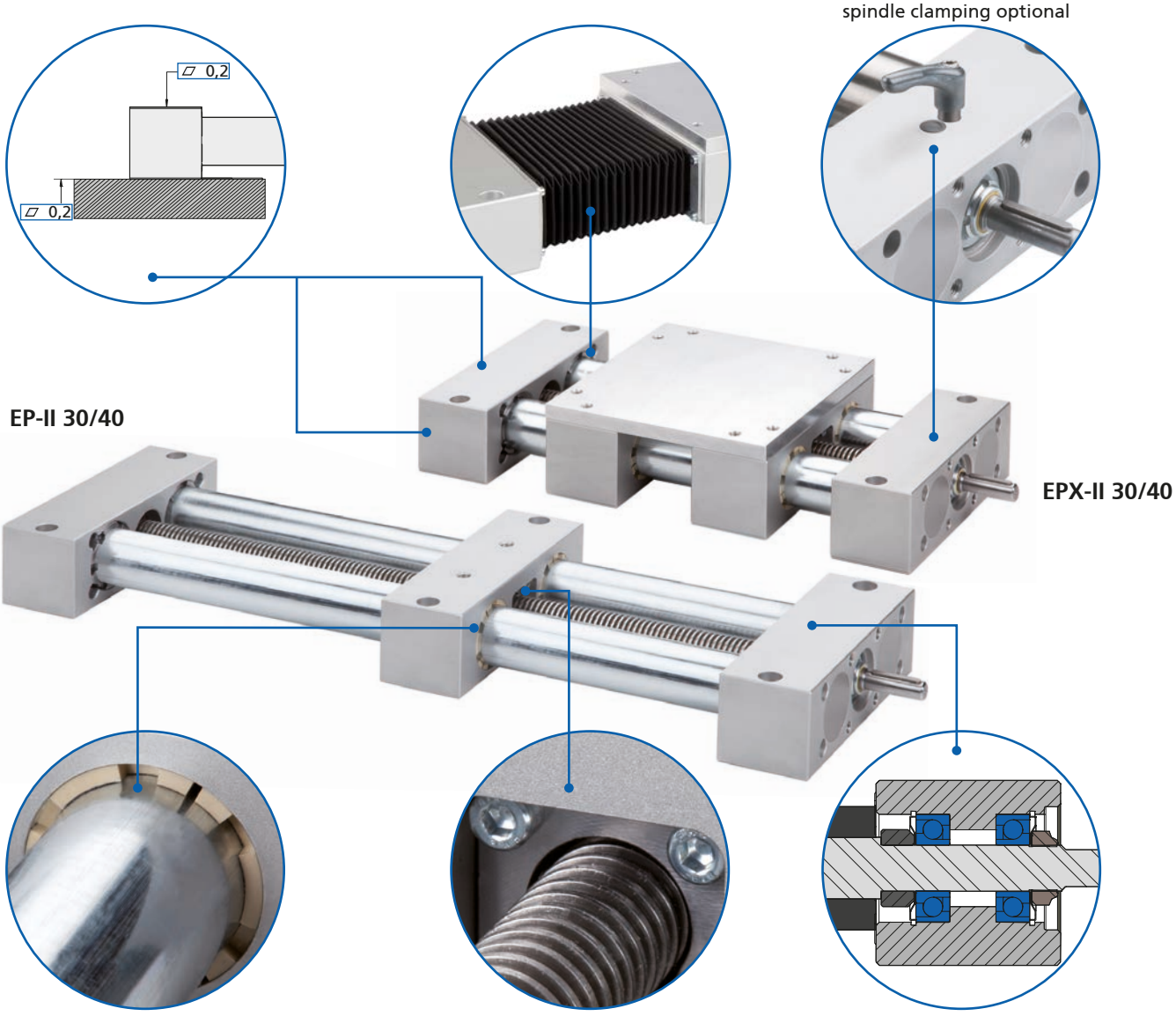

Carriage with slide bushings as standard
✓ Longer lifetime due sleeves made of high performance material

New guide nut concept
✓ Split nuts, simple replacement – no need to dismantle the linear unit
✓ Longer lifetime due to high performance materials

Reduced axial play
✓ Optimised lead screw with fixed bearing in end element

Features:

- High moment capacity
- Version available with large fixing plate
- Identical connection sizes as previous version

Versions – size 30/40

- EP-II 30/40
  Right or lefthand thread
  Right and lefthand thread
  Split Screw
- EPX-II 30/40
  Right or lefthand thread
  Right and lefthand thread
  Split Screw

Options:

- Corrosion-protected units
- Second free-running carriage
- Protect: with bellows and protection class IP 40
- Spindle clamping only at ball-screw spindle units

EPX-II 30/40 linear unit with precise ball screw drive and guide shafts

Precise / plane mounting surface
✓ Distortion-free installation

Tapered lubricating nipple
✓ Central lubricating access on the carriage facilitates maintenance on both sides

Centering holes in the guide table
(Image shows optional centering sets from the accessories)

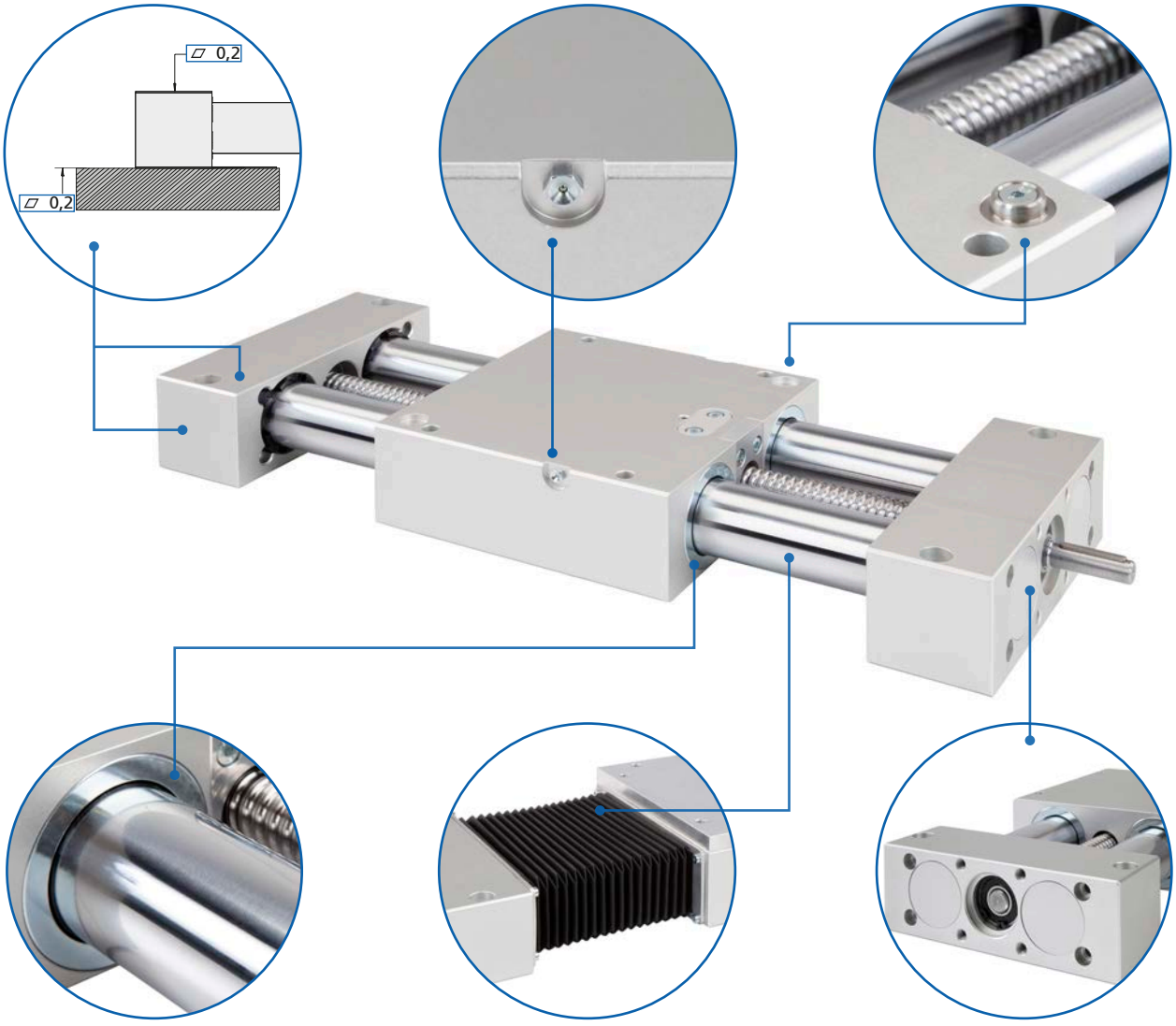

Carriage with ball bushing
✓ Exceptionally long lifetime
✓ Smooth running performance

Bellows
✓ Protection class IP 40

Various fixing possibilities at the endelement
✓ Simple connection of accessories
✓ Also for vertical installation position suitable

Features:
- Identical connection sizes as previous version
- X-version possible via connecting plate and external guide table
- Combination of EPX-II 30/40 KG and EPX-II 30/40 trapezoidal thread is possible

Versions:
- EPX-II 30/40 KG Right thread
- EPX-II 30/40 without drive on request
- Optional with bellows

Options:
- Standard- and long carriage
- Protect: with bellows and protection class IP 40
- Second free-running carriage

EP(X)-II 30/40 Technical data

General information / operating conditions

	EP-II 30	EPX-II 30	EP-II 40	EPX-II 40
Guide	Slide guide			
Installation position	Any position			
Max. speed	0.015 m/s (stroke independent)		0.02 m/s (stroke independent)	
Max. acceleration	3 m/s²			
Repeatability	± 0,1 mm			
Max. no-load torque	0,6 Nm	0,7 Nm	0,7 Nm	0,8 Nm
Drive	Trapezoidal screw, Ø 14, pitch 3		Trapezoidal screw, Ø 20, pitch 4	
Lead accuracy	(± 0,1 / 300 mm)			
Duty cycle	S3, 30%, base 1h			
Ambient temperature	0 to +60°C			
Protection class	Basic: no / Protect: IP 40			

Static load data*

F Force [N]
M Moment [Nm]
I Geometric moment of inertia [cm^4]

* with reference to carriage (deflection of guide element f = 0.5 mm, static, end elements supported)

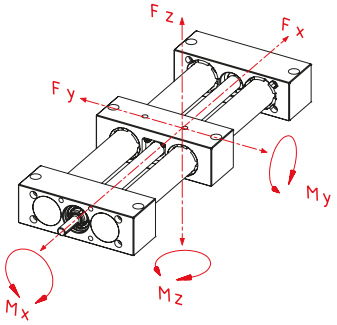

Type / Total length [mm]	Fx	Fy			Fz			Mx	My	Mz
		500	1000	1500	500	1000	1500			
EP-II 30	800	1000	800	500	550	300	100	60	60	75
EPX-II 30	800	1400	1200	700	650	450	200	80	110	140
EP-II 40	1000	3500	2600	1300	2000	580	120	120	130	150
EPX-II 40	1000	6000	3100	1800	2200	680	220	160	190	240

Geometric moment of inertia

[cm^4]

Type	Iy	Iz
EP(X)-II 30	3.47	46.57
EP(X)-II 40	14.84	198.06

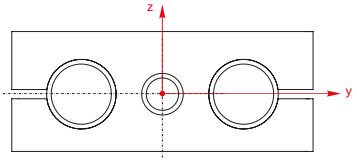

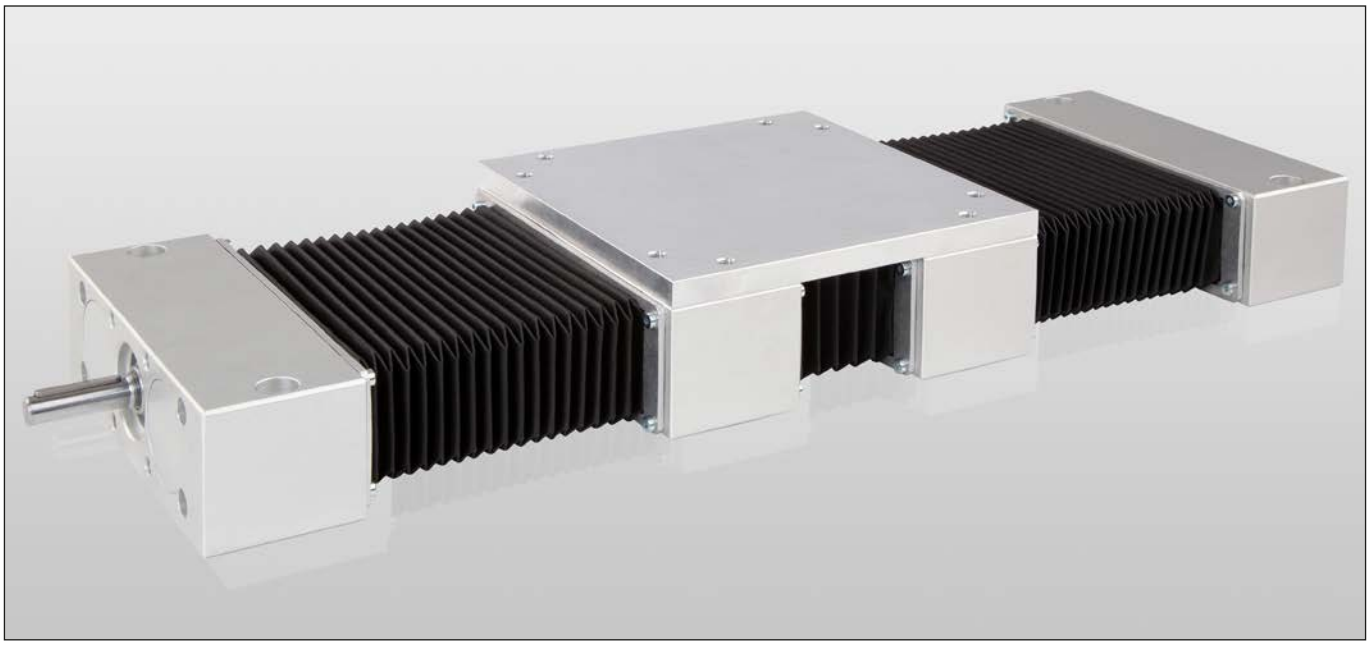

Image shows an EPX in the Protect version (with bellows)

Calculation of the load characteristic to define the lifetime

- The lifetime of linear units are in accordance with the average loads and moments of an application. The load characteristic can approximately calculated by following equation with simultaneously appearing load and moments.

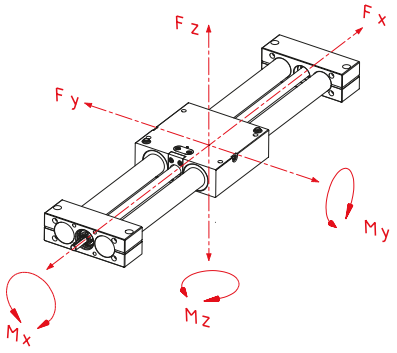

$$\text{Load characteristic} = \frac{\text{Application values (z.B. Fy)}}{\text{Catalog values (z.B. Fy}_{max})}$$

$$\textbf{Load characteristic } B_K = \frac{Fy}{Fy_{max}} + \frac{Fz}{Fz_{max}} + \frac{Mx}{Mx_{max}} + \frac{My}{My_{max}} + \frac{Mz}{Mz_{max}} \leq 1$$

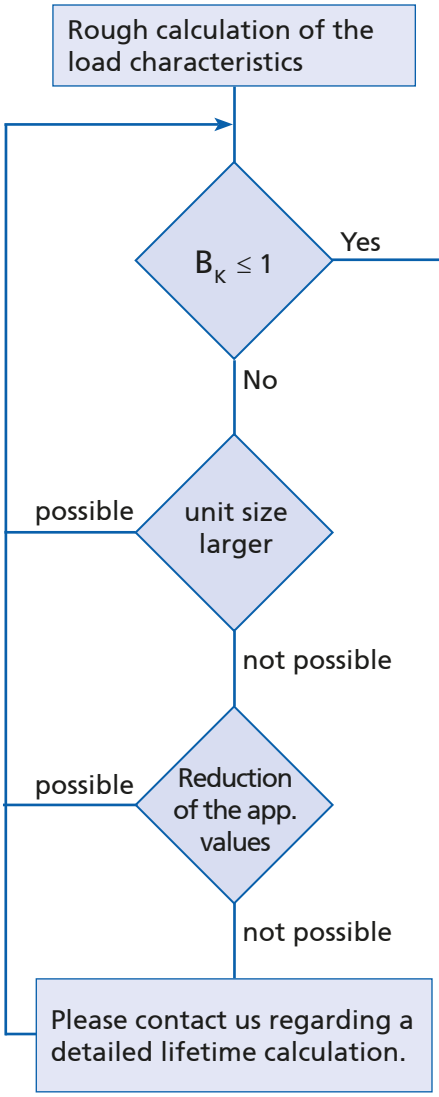

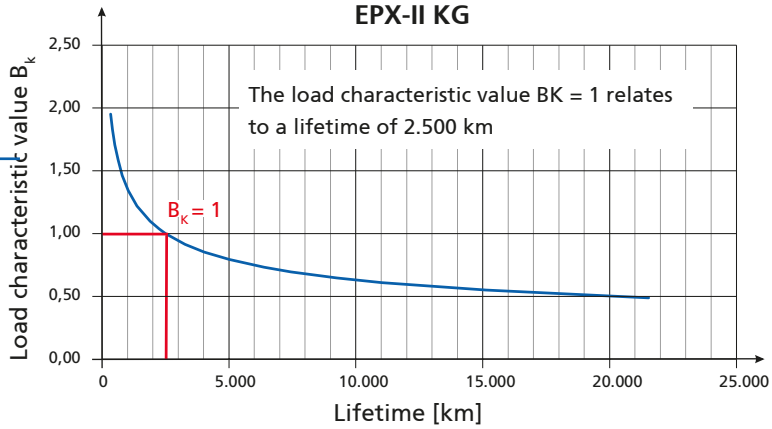

At a load characteristic value of $B_K < 1$ higher theoretical lifetime can be achieved.

The illustration is intended as an approximate reflection of the expected lifetime depending on the load characteristic value B_K.

Increased speeds, short-stroke, vibrations, impacts, insufficient lubrication or other specific conditions are not taken into account.

Please contact us regarding a detailed lifetime calculation.

Example:

✓ The load and moments of the application are:
Fz = 1200N, Mx = 20 Nm und Mz = 45 Nm

According to the above equation you will have following load characteristic of a EPX-II 30/40 KG: $B_K = 0.83$.

General information / operating conditions

	EPX-II 30 KG	EPX-II 40 KG
Guide	Ball bushing	
Installation position	Any position	
Max. speed	0.24 m/s	
Max. acceleration	10 m/s²	
Repeatability	± 0.05 mm	
Max. no-load torque	0.4 Nm	0.5 Nm
Drive	Ball screw, Ø16, pitch 5	Ball screw, Ø20, pitch 5
Lead accuracy	T7 (0.052 mm/300 mm)	
Duty cycle	S3, 100%	
Ambient temperature	0 to +60°C	
Protection class	Basic: no / Protect: IP 40	

Control of Screw speed (Critical screw speed)

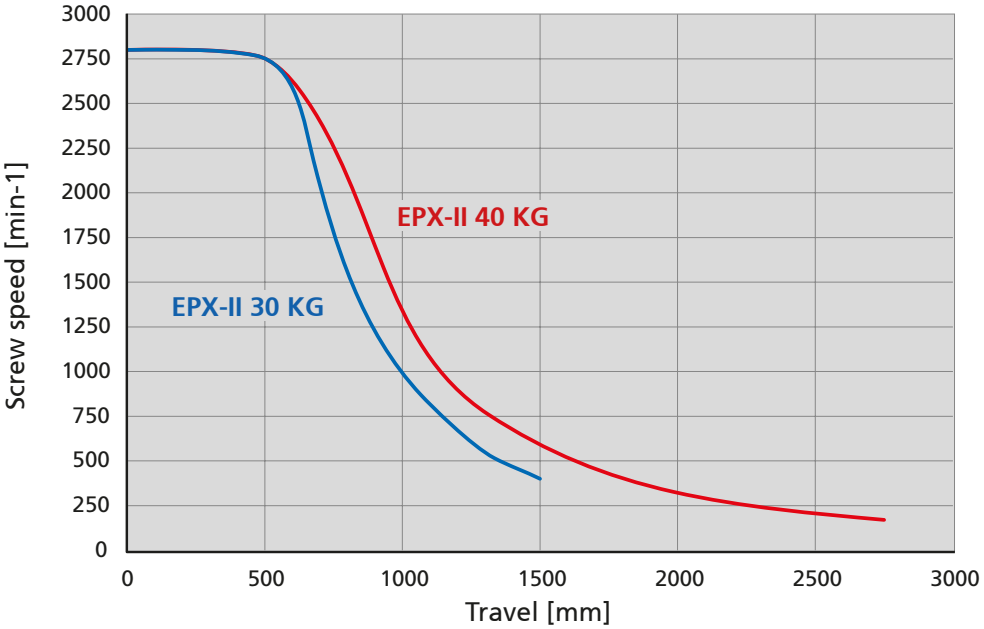

Dynamic load data

F Force [N]
M Moment [Nm]
I Geometric moment of inertia [cm^4]

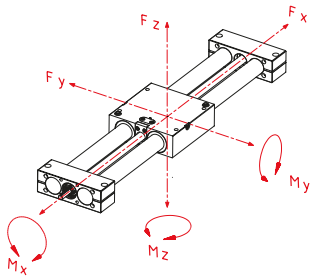

Type	Fx	Fy	Fz	Mx	My	Mz
Compact guide carriage						
EPX-II 30 KG	1000	1100	1100	70	85	99
EPX-II 40 KG	1200	2400	2400	160	190	220
Extended guide carriage						
EPX-II 30 KG	1000	1100	1100	70	100	120
EPX-II 40 KG	1200	2400	2400	160	250	280

Geometric moment of inertia

[cm^4]

Type	Iy	Iz
EPX-II 30 KG	3,83	124,13
EPX-II 40 KG	25.1	534

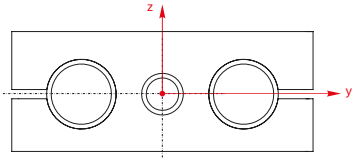

EP-II 30/40 – Dimensions / ordering data

Order informations:

- Corrosion-protected units available on request
- Second non driven carriage available on request
- Scale upon request
- Other screw leads available on request

Version ■ Right *or* lefthand thread

Code No.	Type	Spindle	Basic length	B	C	D1	D2	D3	F	G1	G2	H	J	L1	L2	M1	M2	M3
79_301_ _ _AA_ _ _ _	30	Tr 14x3	150	130	54	8	–	30 H8	2	M6 / 12 deep	M6 / 9 deep	27	50	26	–	40x30	114	70
79_303_ _ _AA_ _ _ _							8								26			
79_401_ _ _AA_ _ _ _	40	Tr 20x4	180	180	63	12	–	40 H8	3	M8 / 20 deep	M8 / 8 deep	31.5	60	38	–	46	160	90
79_403_ _ _AA_ _ _ _							12								38			

_ _ _ _ Total length = basic length + travel [mm] **(Minimum travel: Basic 25 mm, Protect 120 mm)**

Version:
1 = Basic
2 = Protect **(For the Protect version, the stroke must be ordered longer than required by a factor of 1.5 due to the space required for installation of the bellows.)**

A = standard
B = c/w integrated spindle clamping (Only with spindle bearing ball bearing)

Spindle bearing:
1 = ball bearing
0 = slide bearing

Spindle version:
1 = righthand thread
2 = lefthand thread

Total length = basic length + travel

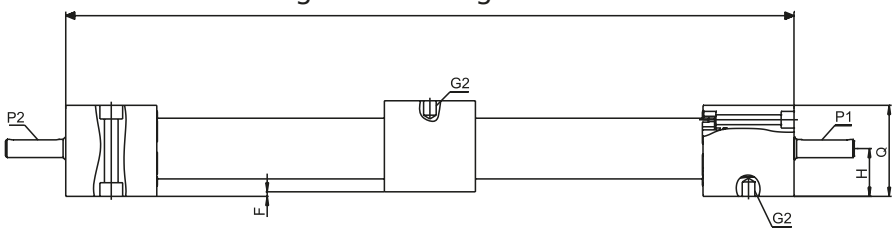

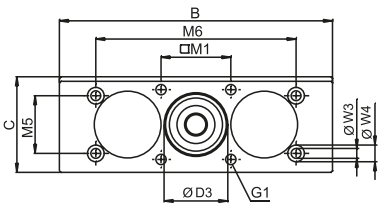

Total length – R

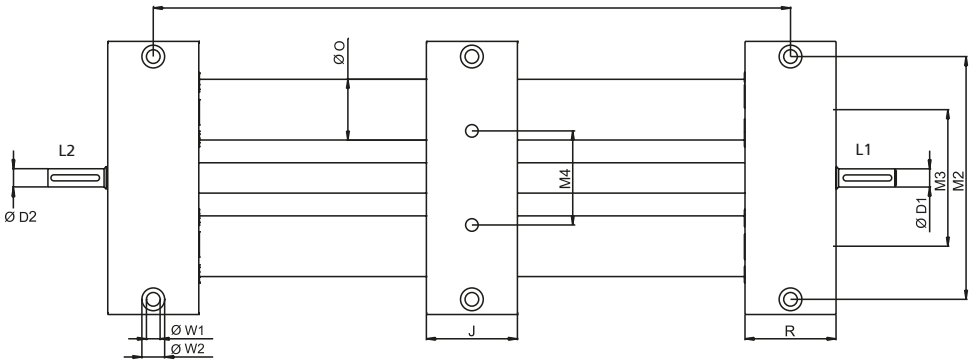

[mm]

M4	M5	M6	O	P1	P2	Q	R	W1	W2	W3	W4	Max. travel	Mass [kg]	
													Basic length	per 100 mm travel
42	–	–	30	2x2x20	–	52	50	7	11 / 7 deep	–	–	1424	2.6	0.4
					2x2x20							1398		
62	38	132	40	4x4x32	–	60	60	9	15 / 9 deep	6.5	11 / 8.5 deep	2820	5.53	0.96
					4x4x32									

EP-II 30/40 – Dimensions / ordering data

Order instructions:

- Please specify basic length and total travel when placing an order
- Corrosion-protected units available on request
- Second non driven carriage available on request
- Scale upon request
- Protect: version with bellows optional (IP 40)
- Other screw leads available on request

Version ■ **Right *and* lefthand thread**

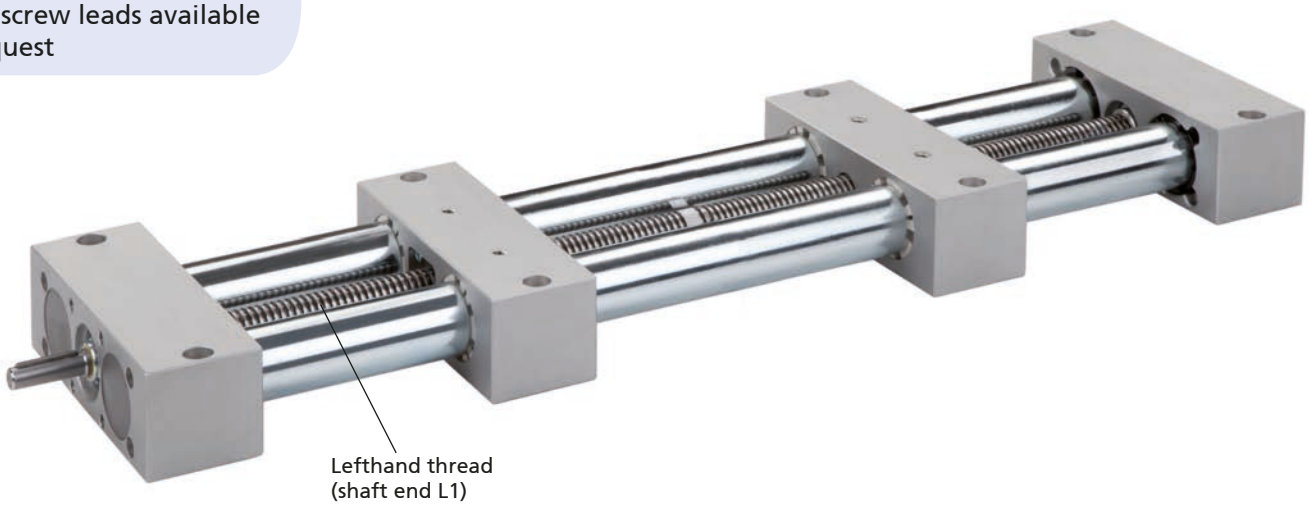

Code No.	Type	Spindle	Basic length	B	C	D1	D2	D3	F	G1	G2	H	J	L1	L2	M1	M2	M3
793301_ _1AA_ _ _ _	30	Tr 14x3	200	130	54	8	–	30 H8	2	M6 / 12 deep	M6 / 9 deep	27	50	26	–	40x30	114	70
793303_ _1AA_ _ _ _							8								26			
793401_ _1AA_ _ _ _	40	Tr 20x4	240	180	63	12	–	40 H8	3	M8 / 20 deep	M8 / 8 deep	31.5	60	38	–	46	160	90
793403_ _1AA_ _ _ _							12								38			

_ _ _ _ Total length = basic length + total travel [mm] **(minimum total travel 50 mm)**

A = standard
B = c/w integrated spindle clamping (Only with spindle bearing ball bearing)

Spindle bearing:
1 = ball bearing
0 = slide bearing

Total length = basic length + travel

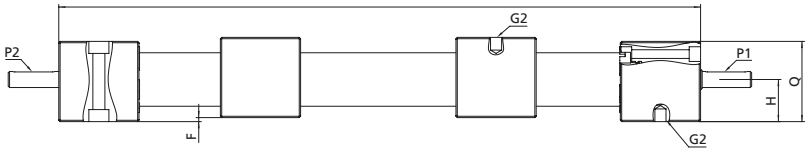

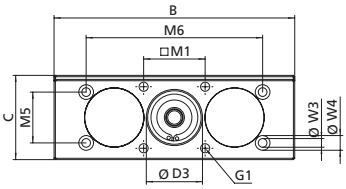

Total length – R

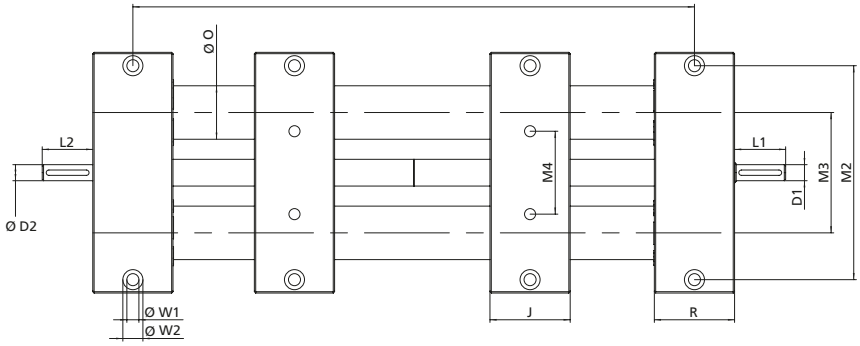

[mm]

M4	M5	M6	O	P1	P2	Q	R	W1	W2	W3	W4	Max. travel	Mass [kg]	
													Basic length	per 100 mm travel
42	–	–	30	2x2x20	– 2x2x20	52	50	7	11 / 7 deep	–	–	1800	3.43	0.4
62	38	132	40	4x4x32	– 4x4x32	60	60	9	15 / 9 deep	6.5	11 / 8.5 deep	2760	7.73	0.96

EP-II 30/40 – Dimensions / ordering data

Order instructions:

- Please specify basic length and total travel when placing an order
- Corrosion-protected units available on request
- Second non driven carriage available on request
- Scale upon request
- Protect: version with bellows optional (IP 40)
- Other screw leads available on request

Version ■ **Split screw**

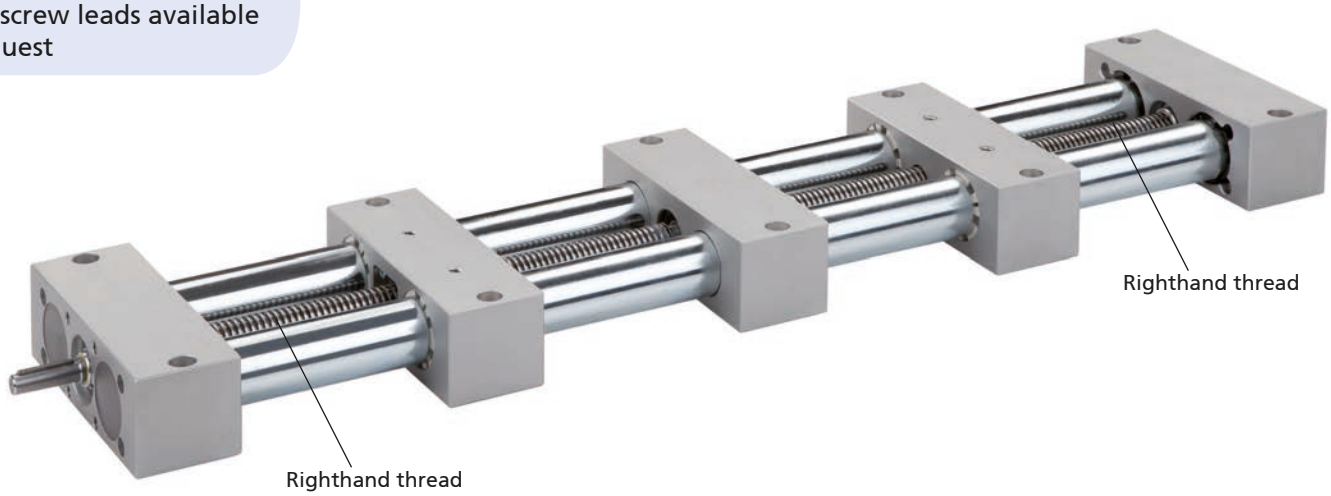

Code No.	Type	Spindle	Basic length	B	C	D1	D2	D3	F	G1	G2	H	J	L1	L2	M1	M2	M3
7943031_1AA_ _ _ _	30	Tr 14x3	250	130	54	8	8	30 ^{H8}	2	M6 / 12 deep	M6 / 9 deep	27	50	26	26	40x30	114	70
7944031_1AA_ _ _ _	40	Tr 20x4	300	180	63	12	12	40 ^{H8}	3	M8 / 20 deep	M8 / 8 deep	31.5	60	38	38	46	160	90

_ _ _ _ Total length = basic length + total travel [mm] **(minimum total travel 50 mm)**

A = standard
B = c/w integrated spindle clamping

Total length = basic length + travel

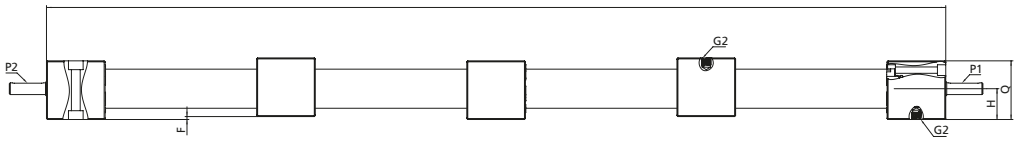

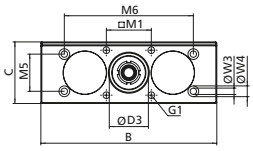

Total length – R

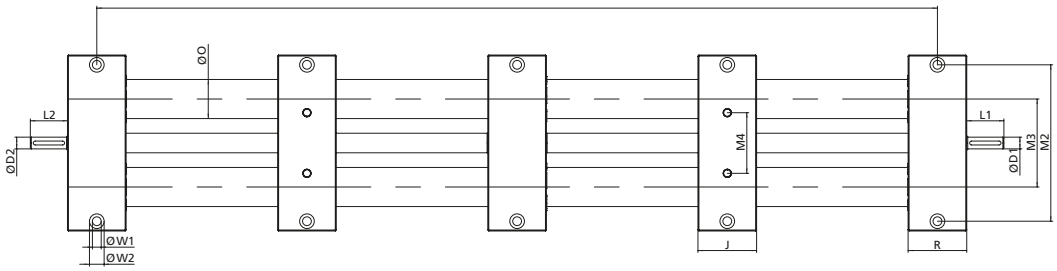

[mm]

M4	M5	M6	O	P1	P2	Q	R	W1	W2	W3	W4	Max. travel	Mass [kg]	
													Basic length	per 100 mm travel
42	–	–	30	2x2x20	2x2x20	52	50	7	11 / 7 deep	–	–	1375	4.2	0.4
62	38	132	40	4x4x32	4x4x32	60	60	9	15 / 9 deep	6.5	11 / 8.5 deep	2700	9.32	0.96

EPX-II 30/40 – Dimensions / ordering data

Order informations:

- Corrosion-protected units available on request
- Second non driven carriage available on request
- Scale upon request
- Other screw leads available on request

Version ■ **Right *or* lefthand thread**

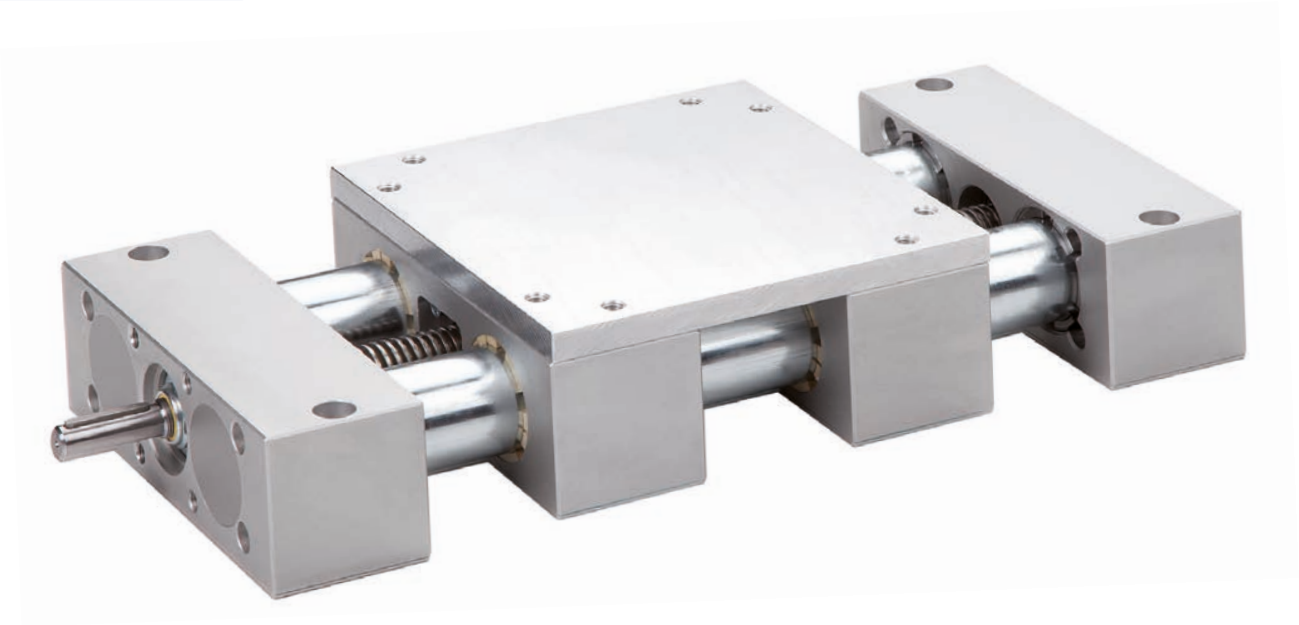

Code No.	Type	Spindle	Basic length	B	C	D1	D2	D3	F	G1	G2	G3	H	H2	J	L1	L2	M1	M2
79_301_ _ _AA_ _ _ _	30	Tr 14x3	230	130	64	8	–	30 ^{H8}	2	M6 / 12 deep	M6	M6 / 9 deep	27	10	130	26	–	40x30	114
79_303_ _ _AA_ _ _ _							8										26		
79_401_ _ _AA_ _ _ _	40	Tr 20x4	300	180	75	12	–	40 ^{H8}	3	M8 / 20 deep	M8	M8 / 8 deep	31.5	12	180	38	–	46	160
79_403_ _ _AA_ _ _ _							12										38		

_ _ _ _ Total length = basic length + travel [mm] **(Minimum travel: Protect 120 mm)**

Version:
1 = Basic
2 = Protect **(For the Protect version, the stroke must be ordered longer than required by a factor of 1.5 due to the space required for installation of the bellows.)**

A = standard
B = c/w integrated spindle clamping (Only with spindle bearing ball bearing)

Spindle bearing:
1 = ball bearing
0 = slide bearing

Spindle version:
5 = righthand thread
6 = lefthand thread

Total length = basic length + travel

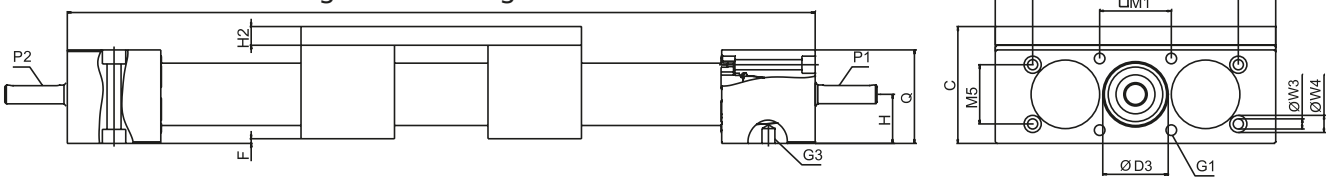

Total length – R

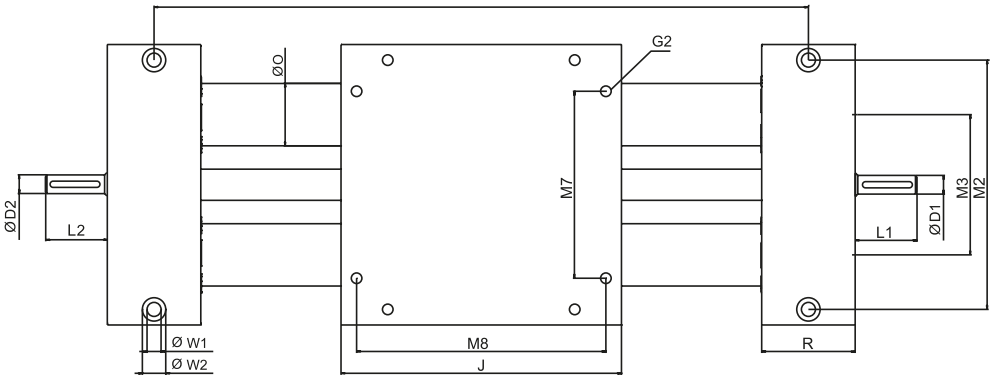

[mm]

M3	M5	M6	M7	M8	O	P 1	P 2	Q	R	W1	W2	W3	W4	Max. travel	Mass [kg]	
															Basic length	per 100 mm travel
70	–	–	80	114	30	2x2x20	– 2x2x20	52	50	7	11 / 7 deep	–	–	1344 1318	4.1	0.4
90	38	132	120	160	40	4x4x32	– 4x4x32	60	60	9	15 / 9 deep	6.5	11 / 8.5 deep	2700	8.95	0.96

EPX-II 30/40 – Dimensions / ordering data

Order instructions:

- Please specify basic length and total travel when placing an order
- Corrosion-protected units available on request
- Second non driven carriage available on request
- Scale upon request
- Protect: version with bellows optional (IP 40)
- Other screw leads available on request

Version ■ **Right *and* lefthand thread**

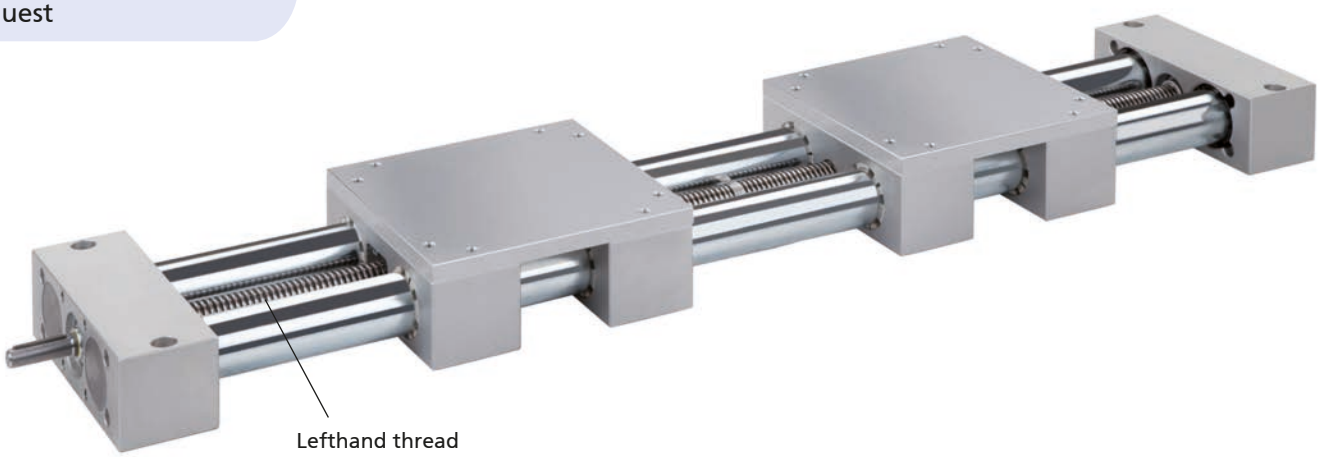

Code No.	Type	Spindle	Basic length	B	C	D1	D2	D3	F	G1	G2	G3	H	H2	J	L1	L2	M1	M2
797301_ _1AA_ _ _ _	30	Tr 14x3	360	130	64	8	–	30 H8	2	M6 / 12 deep	M6	M6 / 9 deep	27	10	130	26	–	40x30	114
797303_ _1AA_ _ _ _							8										26		
797401_ _1AA_ _ _ _	40	Tr 20x4	480	180	75	12	–	40 H8	3	M8 / 20 deep	M8	M8 / 8 deep	31.5	12	180	38	–	46	160
797403_ _1AA_ _ _ _							12										38		

_ _ _ _ Total length = basic length + travel [mm]

A = standard
B = c/w integrated spindle clamping (Only with spindle bearing ball bearing)

Spindle bearing:
1 = ball bearing
0 = slide bearing

Total length = basic length + travel

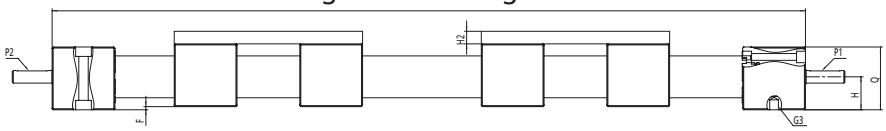

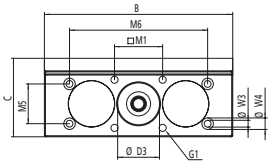

Total length – R

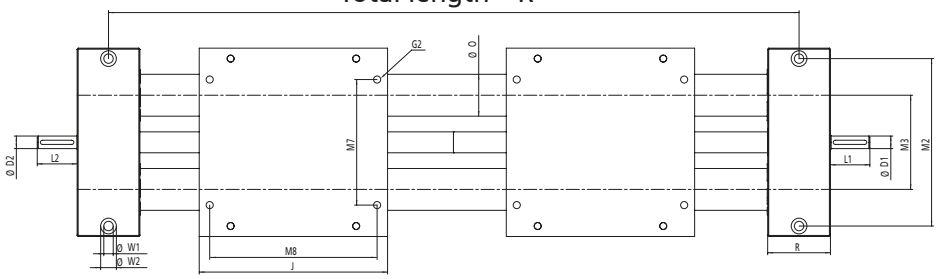

[mm]

M3	M5	M6	M7	M8	O	P 1	P 2	Q	R	W1	W2	W3	W4	Max. travel	Mass [kg]	
															Basic length	per 100 mm travel
70	–	–	80	114	30	2x2x20	– 2x2x20	52	50	7	11 / 7 deep	–	–	1640	6.3	0.4
90	38	132	120	160	40	4x4x32	– 4x4x32	60	60	9	15 / 9 deep	6.5	11 / 8.5 deep	2520	14.17	0.96

EPX-II 30/40 – Dimensions / ordering data

Order instructions:

- Please specify basic length and total travel when placing an order
- Corrosion-protected units available on request
- Second non driven carriage available on request
- Scale upon request
- Protect: version with bellows optional (IP 40)
- Other screw leads available on request

Version ■ **Split screw**

Code No.	Type	Spindel	Basic length	B	C	D1	D2	D3	F	G1	G2	G3	H	H2	J	L1	L2	M1	M2
7983031_1AA_ _ _ _	30	Tr 14x3	410	130	64	8	8	30 ^{H8}	2	M6 / 12 deep	M6	M6 / 9 deep	27	10	130	26	26	40x30	114
7984031_1AA_ _ _ _	40	Tr 20x4	540	180	75	12	12	40 ^{H8}	3	M8 / 20 deep	M8	M8 / 8 deep	31.5	12	180	38	38	46	160

_ _ _ _ Total length = basic length + travel [mm]

A = standard
B = c/w integrated spindle clamping

Total length = basic length + travel

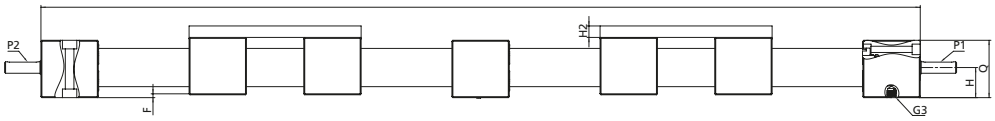

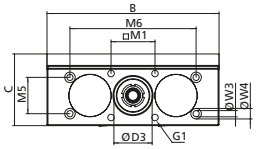

Total length – R

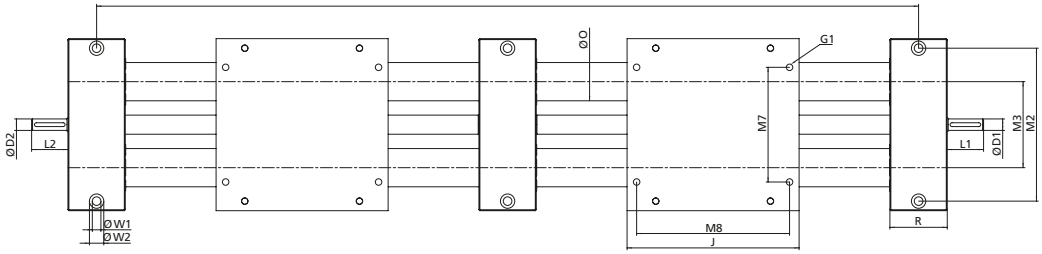

[mm]

M3	M5	M6	M7	M8	O	P 1	P 2	Q	R	W1	W2	W3	W4	Max. travel	Mass [kg]	
															Basic length	per 100 mm travel
70	–	–	80	114	30	2x2x20	2x2x20	52	50	7	11 / 7 deep	–	–	1295	7.2	0.4
90	38	132	120	160	40	4x4x32	4x4x32	60	60	9	15 / 9 deep	6.5	11 / 8.5 deep	2460	16.16	0.96

EPX-II 30/40 KG – Dimensions / ordering data

Order informations:

- Without drive (Ball screw drive) available on request
- Second shaft end available on request
- Second non driven carriage available on request
- Split screw available on request
- For further screw leads available on request

Version ■ Righthand thread

Code No.	Type	Spindle	Basic length	B	C	D1	D3	F	G1	G3	H	J1	J2	L1	M1	M2
79A3011A_ AAA_ _ _ _	30	KG 16x5	190	130	54	8	30 H8	2	M6 / 16 deep	M6 / 12 deep	27	90	–	26	40x30	114
79A3011A_ ABA_ _ _ _	30 with extended guide carriage		230									–	130			
79A4011A_ AAA_ _ _ _	40	KG 20x5	250	180	63	12	40 H8	3	M8 / 20 deep	M8 / 12 deep	31.5	130	–	38	46	160
79A4011A_ ABA_ _ _ _	40 with extended guide carriage		300									–	180			

_ _ _ _ Total length = basic length + travel [mm] **(Minimum travel: Basic 50 mm, Protect 120 mm)**

Version:
1 = Basic
2 = Protect **(For the Protect version, the stroke must be ordered longer than required by a factor of 1.5 due to the space required for installation of the bellows.)**

Total length = basic length + travel

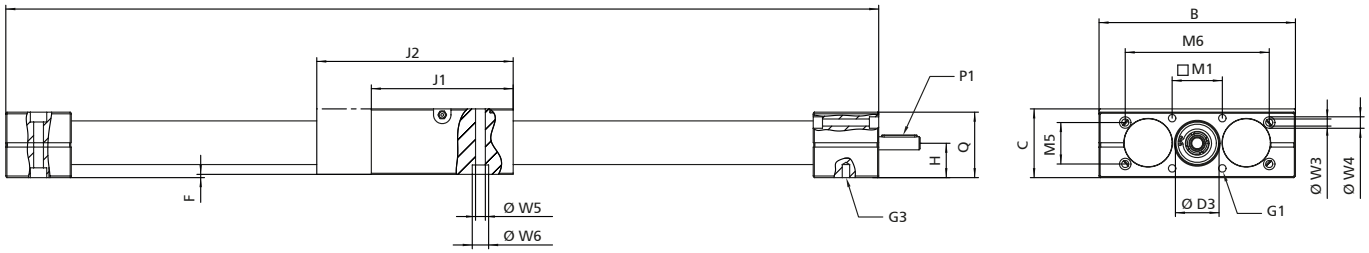

Total length – R

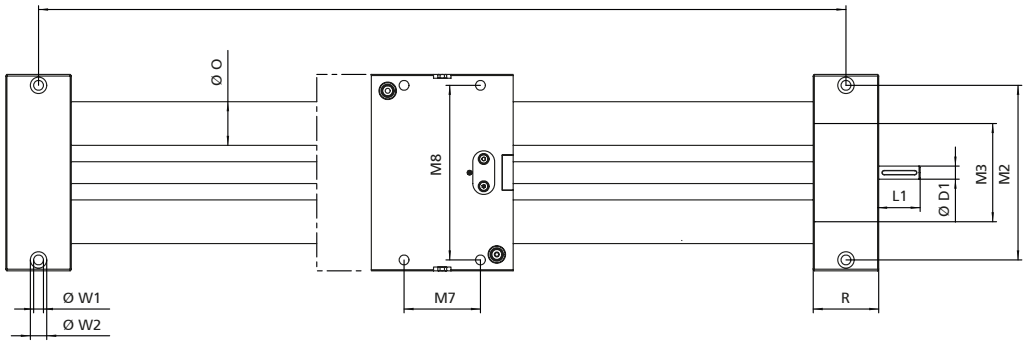

[mm]

M3	M5	M6	M7	M8	O	P 1	Q	R	W1	W2	W3	W4	W5	W6	max. Hub	Mass [kg]	
																Basic length	per 100 mm travel
70	35	92	30	114	25	2x2x20	52	50	7	11 / 7 deep	M6	9 / 6 deep	6.6	11 / 8.6 deep	1310	4.5	0.93
			80												1270	5.4	0.93
90	38	132	70	160	40	4x4x32	60	60	9	15 / 9 deep	M8	10.5 / 8.5 deep	9	15 / 8.6 deep	2250	9.80	2.22
			120												2200	11.92	2.22

Centering Sets for EPX-II KG

- The following positions could be defined exactly during the design process per set
  - Load capacity
  - Linear unit
- Reproductable position of the load capacity
- Reduced assembly/disassembly time of the load capacity or the linear unit
- Accuracy of the centering bolts h6
- **To use for all EPX-II KG linear units in Basic and Protect design**

Scope of delivery per set:
2 centering bolts and fixing material

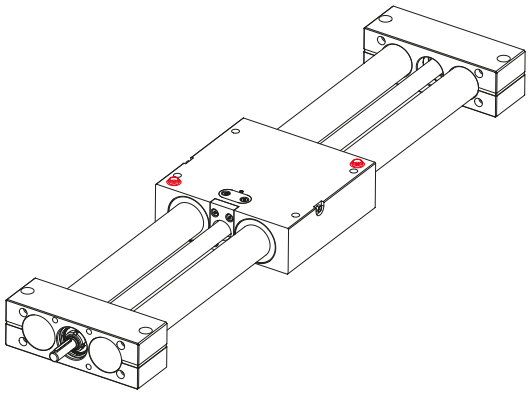

Fig. 1: Slide centering

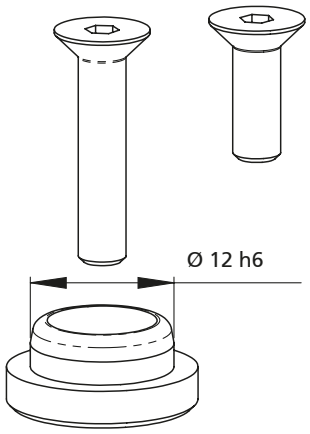

Size -B-

Code No.	Type	Use for
91899	Centering Set Size -B-	Slide centering EPX-II 30/40 KG

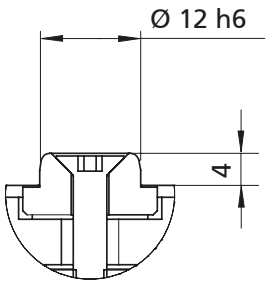

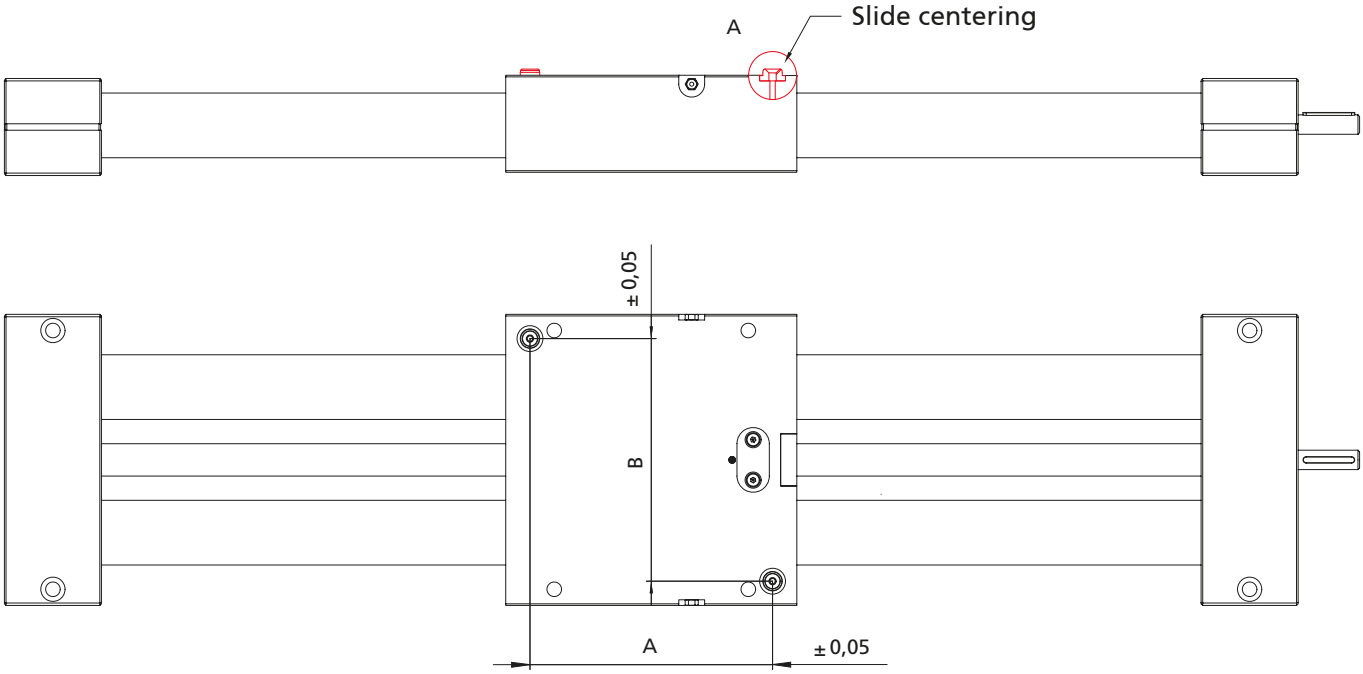

[mm]

Type	A	B
EPX-II 30 KG	60	100
EPX-II 30 KG with extended guide carriage	100	100
EPX-II 40 KG	100	150
EPX-II 40 KG with extended guide carriage	150	150

Adapter sets for crossing combinations

- For crossing combination of EPX-II units of the same size
- An extended carriage is required for EPX-II KG
- Crossing combinations of EPX-II KG with extended carriage to EPX-II with trapezoidal screw possible
- Regardless of Basic or Protect version

Scope of delivery per set – Fig. 1:
Adapter plate and Fixing screws

Scope of delivery per set – Fig. 2:
Fixing screws

Fig. 1:
Crossing combination of two EPX-II with ball screw and extended carriage

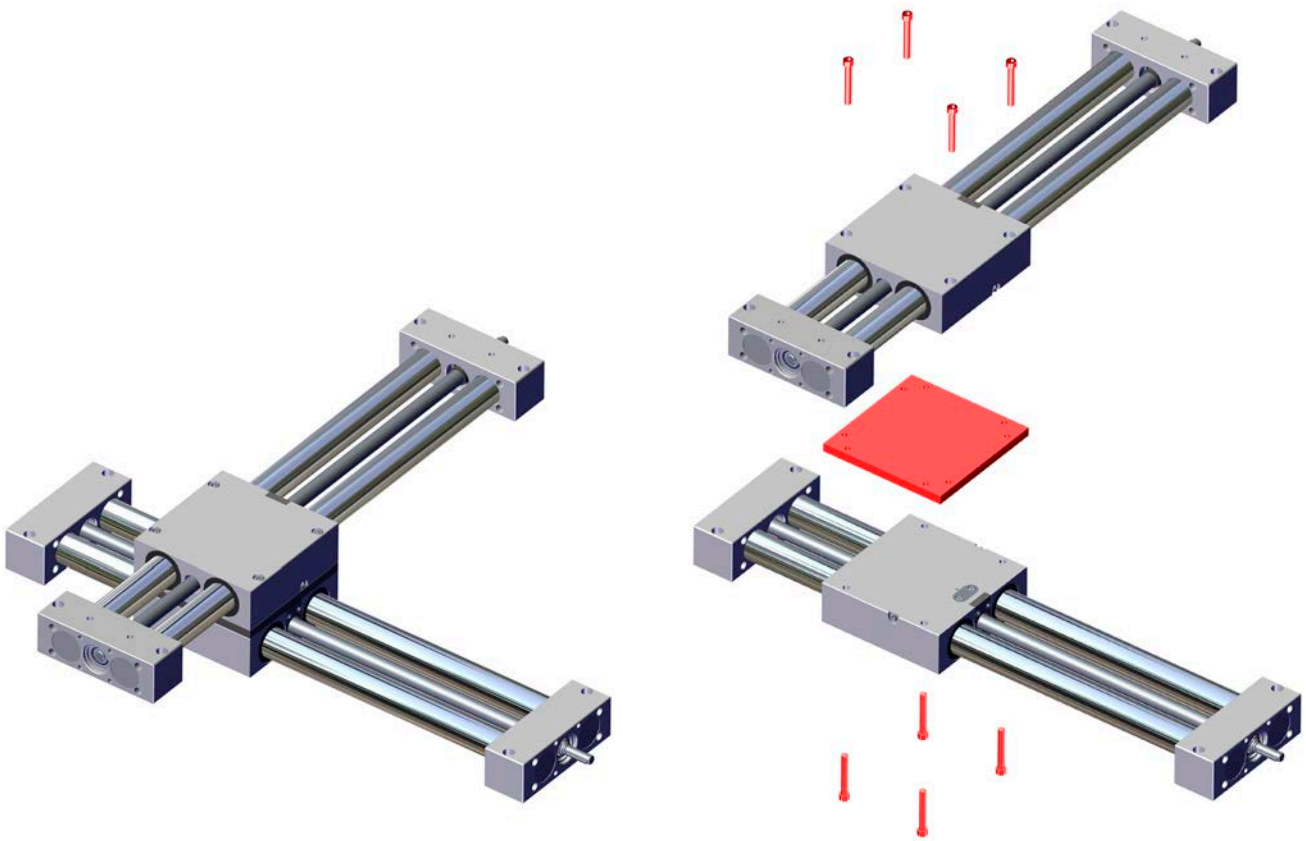

Code No.	Type	Use for
955115	Fig. 1	EPX-II 30
955116	Fig. 1	EPX-II 40
955117	Fig. 2	EPX-II 30
955118	Fig. 2	EPX-II 40

Order example – Fig. 1:
Crossed arrangement of two
EPX-II 40 Basic with ball screw
One total length 400mm,
once total length 800mm

Order:
1x 79A4011A1ABA00400
1x 79A4011A1ABA00800
1x 955116

Fig. 2:
Crossing combination of an EPX-II with ball screw
and extended carriage with an EPX-II with trapezoidal screw

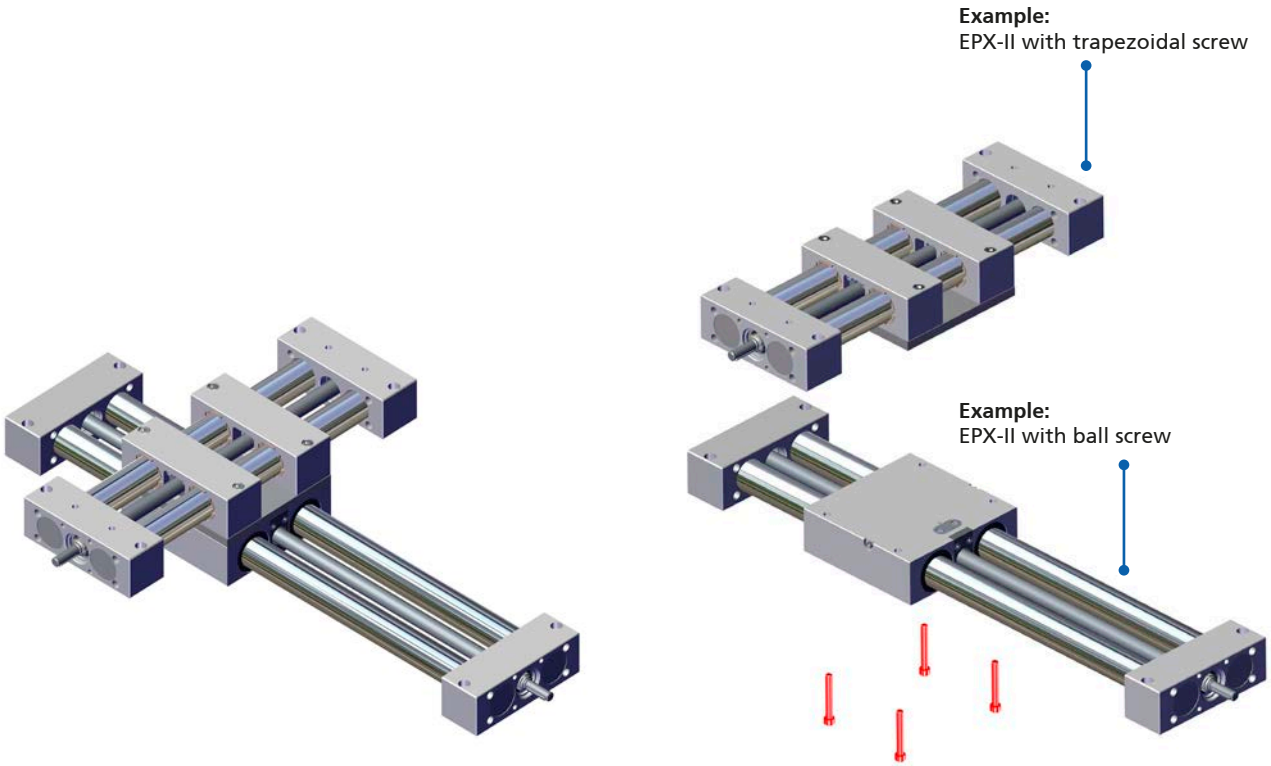

EP(X)-II 30/40 – Drive

Handwheel

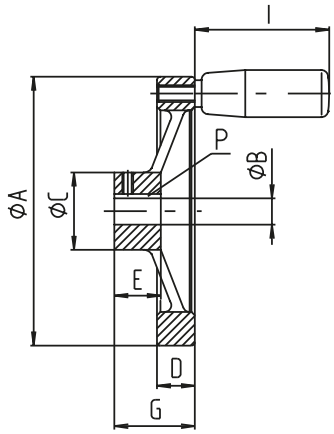

Material: Die-cast aluminium, black powder-coated

Diam. 140-200

Diam. 60-100

[mm]

Code No.	Type	ØA	B	C	D	E	G	P	I
90913	30	100	8	28	14	17	30	2x2	52
90915	40	100	12	28	14	17	30	4x4	52
90905	40	140	12	36	16.5	19.5	36	4x4	66

Chain wheel

- Other sizes on request

Material: Steel, 500 N/mm² min.

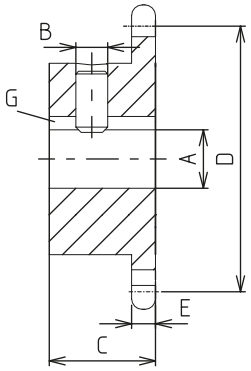

[mm]

Code No.	Type	A	B	C	D	E	G	No. of teeth	Size
91703	30	8	M6	18	41.1	4.5	2x2	10	1/2 x 3/16"
91704	40	12	M6	20	53	4.5	4x4	13	1/2 x 3/16"

HTD timing belt pulley

- Suitable for maintenance-free continuous operation
- Excellent accuracy and zero backlash during change of direction
- Clampable on feather key

Material: Steel

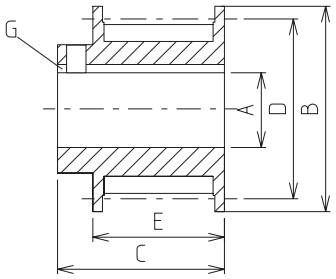

[mm]

Code No.	Type	A	B	C	D	E	G	Tensile force	Pitch
92103	30	8	23	20	19.09	14.5	2x2	220 N	5
92105	40	12	32	26	28.65	20.5	4x4	330 N	5

Order instruction:

- When using angle drives, only use linear units with ball bearings

Angular drive

- Fits all EP(X)-II linear units 30–40
- No shaft extension or adapter necessary
- Can be retrofitted
- Low noise level
- Suitable for manual adjustment and motorized via EHL or unit drive LZ

Technical data

Angular Drive												
Type	Duty cycle		Ambient temperature		Drive speed		Nominal torque [Nm]		Max. torque* [Mm]		Efficiency [%]	
	L	T	L	T	L	T	L	T	L	T	L	T
30	S3 30% basic 1h		0°C to +60°C		0 to 350 min^{-1}		1.90	0.95	8		95	90
40							2.90	1.45	12		95	90

*Briefly. Not a permanent moment. Block travel not permitted.

Configuration examples

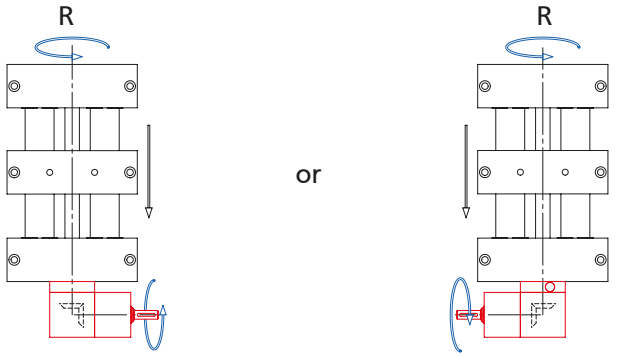

Components needed:

1x EP(X)-II with righthand thread
1x Angular drive – L
1x Flange bearing unit

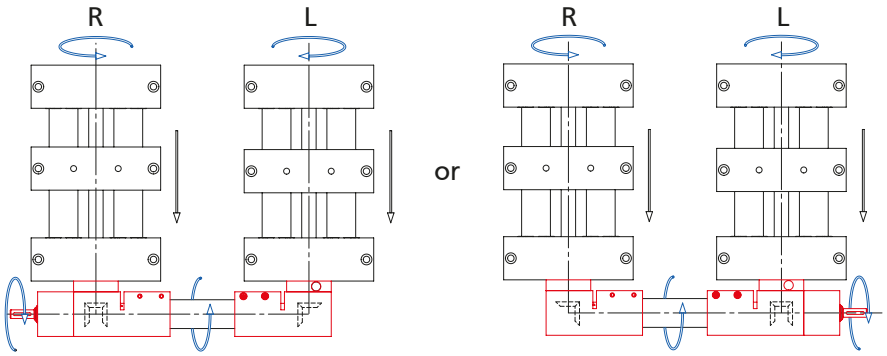

Components needed:

1x EP(X)-II with righthand thread
1x EP(X)-II with lefthand thread
2x Angular drive – T
1x Flange bearing unit
1x Transmission unit

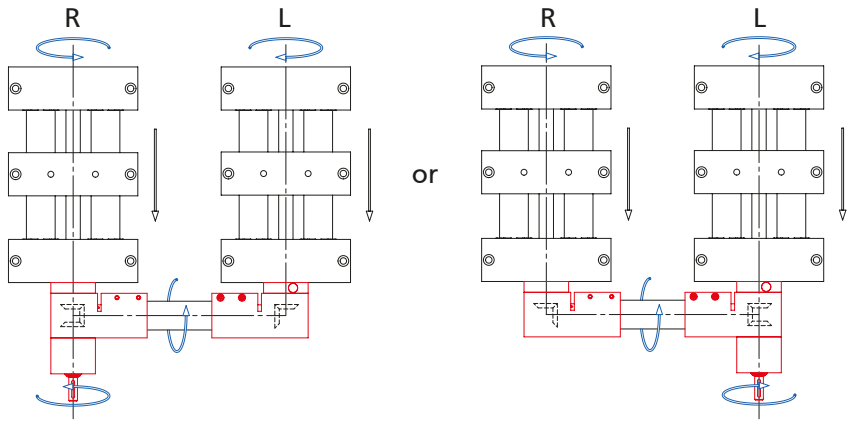

Components needed:

1x EP(X)-II with righthand thread
1x EP(X)-II with lefthand thread
2x Angular drive – T
1x Flange bearing unit
1x Transmission unit

EP(X)-II – Drive

Order instruction:

- When adapting an hand-wheel or positioning-indicator a flange bearing unit is still required

Angular drive – L

- For 90° arrangement of the hand-wheel, EHL or unit drive LZ on an EP(X)-II linear unit

Scope of delivery:
Housing, 1 Plastic-bevel gear with adjusting ring, screws and closing caps

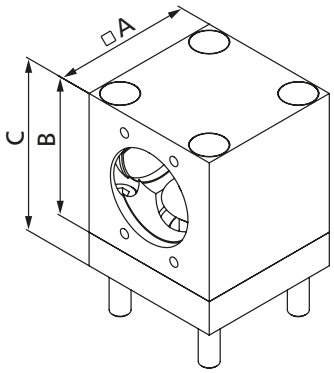

[mm]

Code No.	Type	i	A	B	C
91530F1F1A	30	1:1	52	52	61
91531F1F1A	40	1:1	62	62	77

Order instruction:

- When adapting an hand-wheel or positioning-indicator a flange bearing unit is still required

Angular drive – T

- For synchronization of two EP(X)-II linear units
- Suitable for manual adjustment, via EHL or unit drive LZ

Scope of delivery:
Housing, 2 Plastic-bevel gears with adjusting rings, screws and closing caps

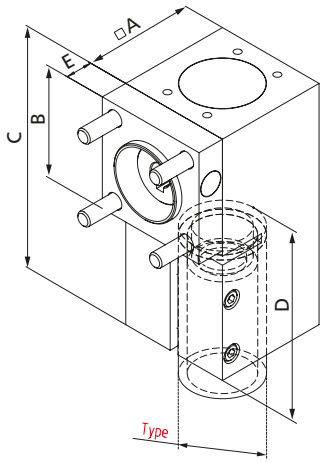

[mm]

Code No.	Type	i	A	B	C	D	E
91530G1F1A	30	1:1	52	52	102	39	9
91531G1F1A	40	1:1	62	62	134	55	15

Order instruction:

- When adapting an EHL or the unit drive LZ S, a motor adapter is still required

Flange bearing unit

- For adaptation of the hand-wheel or position indicator on the angular drive
- When adapting an EHL or the unit drive LZ S, a motor adapter is still required

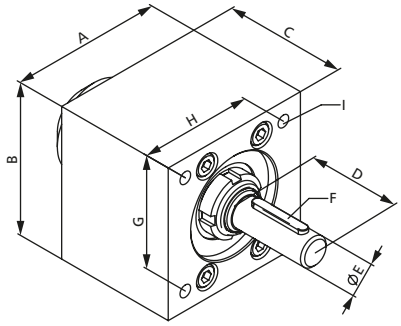

Scope of delivery:
Housing, 1 Plastic-bevel gear with shim rings and screws

[mm]

Code No.	Type	A	B	C	D	E	F	G	H	I
91540H1F1A	30	52	52	40	24	8	2x2x20	30	40	4xM6-12 deep
91541H1F1A	40	62	62	50	38	12	4x4x25	46	46	4xM6-12 deep

Transmission unit

- For torque transmission with parallel linear units

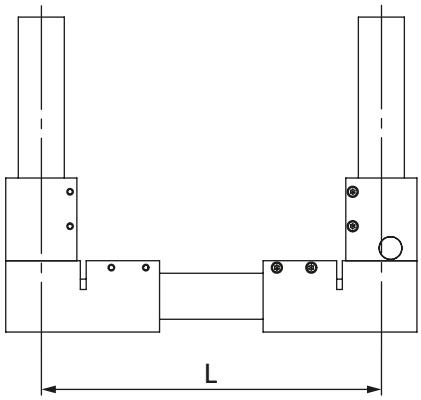

Material:
Tube and bearing elements zinc plated steel, shaft bright

[mm]

Code No.	Type	Basic length (minimum length)	Max. length	Required length
92523_ _ _ _	30	160	3074	L – 74
92544_ _ _ _	40	210	3096	L – 96

Length [mm] ⩽

Drive – EPX-II KG

Order information:

- Reductions 1:1.5, 1:2, 1:3, 1:4 or 1:5 on request

Angular gear

- Fits all EPX-II KG-actuators
- Can be retrofitted
- Low torsional backlash
- Low noise level
- Spiral toothing

Scope of delivery:
Angular gear 1:1,
Fastenings on EPX-II KG-actuators and synchronisation shaft depending on system

Technical data angular gear

	For EPX-II 30-40 KG	
Reduction		1:1
Drive speed	min^{-1}	3000
Torsional backlash at output shaft	arcmin	≤ 9
Efficiency at full load	%	> 98
Running noise at 1500 rpm	db(A)	≤ 70
Weight	Kg	4.5
Surface		Primer RAL 9005 – black matt
Geometric moment of inertia	$Kgcm^2$	1.79
Idle torque	Nm	0,4

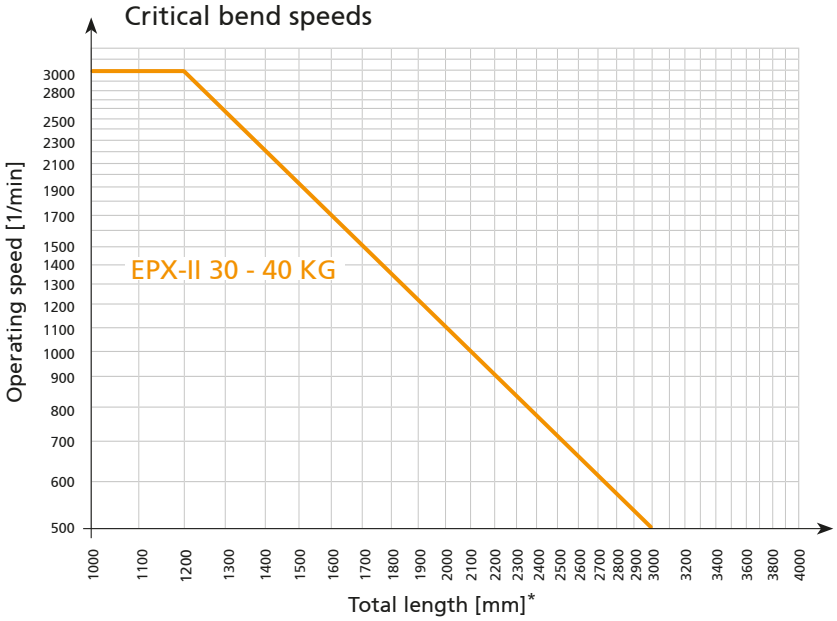

*To calculate the critical bending speed of system 4, use half of the total length.

Angular gear for EPX-II KG - actuators

System 1

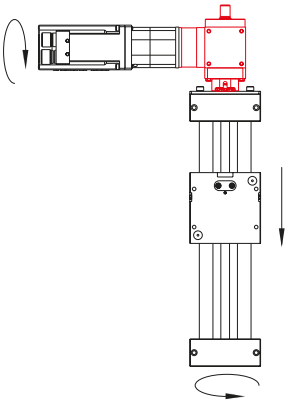

System 2

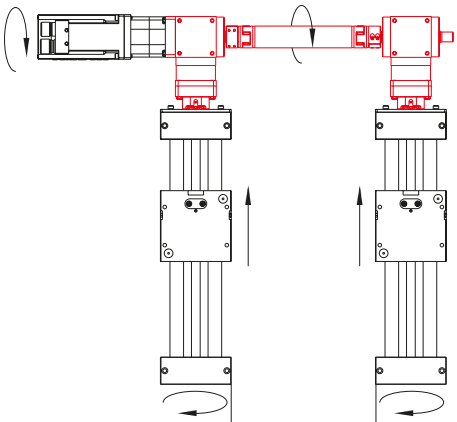

System 3

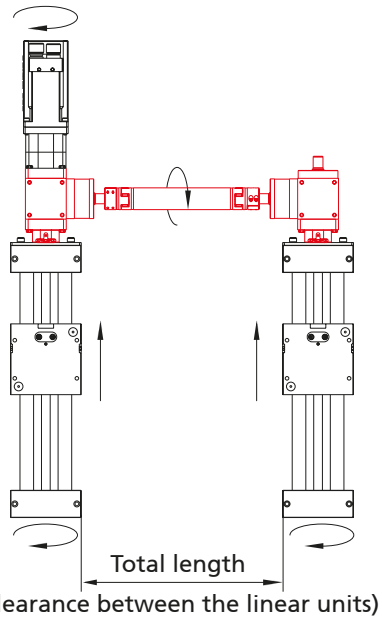

System 4

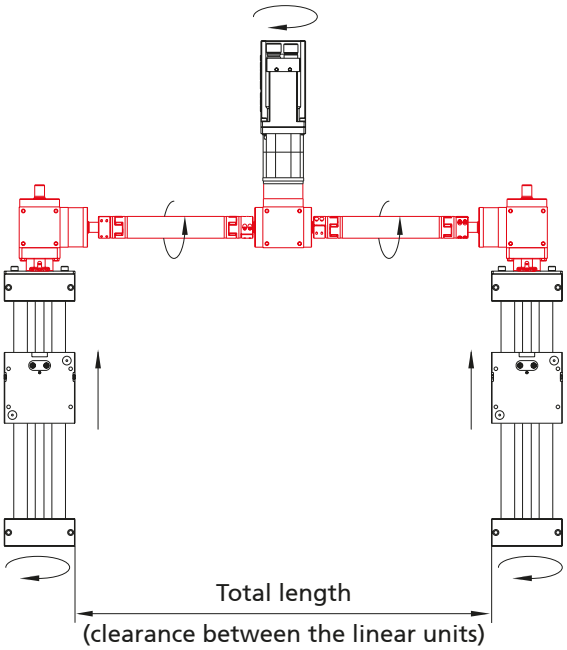

[mm]

Code No.	Type	Basic length (minimum length)	Max. length (clearance)	Weight [kg]	
				Basic length	per 100 mm travel
982_ _ A1A0000	Angular gear system 1	-	-	5.5	-
982_ _ A1B_ _ _ _	Angular gear system 2	123	2860	10.5	0.1
982_ _ A1C_ _ _ _	Angular gear system 3	228	2965	10.5	0.1
982_ _ A1D_ _ _ _	Angular gear system 4	500	6029	15.5	0.1

982_ _ A1D_ _ _ _
- Total length (mm)
- 40 = EPX-II 30 KG
- 41 = EPX-II 40 KG

Note: Additional information, dimensions, accessories and necessary tools for assembling the angular gears can be found in our main catalogue "Linear Technology" (Chapter: Motors and controls).

Motor adapter kit for RK AC servomotors

- Servomotors from the RK standard range can be easily connected
- Complete motor adapter kits manufactured to your specifications on request

Scope of delivery:
Motor adapter kit, elastomer coupling and fixation material

Type	Servo motors without gearbox	
	RK-AC 240	RK-AC 470
Angular gear system 1 and 4 for EPX-II 30-40 KG	949130	949131
Angular gear system 2 and 3 for EPX-II 30-40 KG	949139	949140

Selection table – motor adaptor/coupling

Type	Servo motor		Three-phase A.C. motor	
	RK-AC 118	RK-AC 240	90/120 W	180/250 W
EP(X)-II 30 EPX-II 30 KG	949200	–	949996	–
	911430 0811	–	911940 0812	–
EP(X)-II 40 EPX-II 40 KG	949201	949221	949614	949414
	911430 1112	911430 1214	911430 1212	911430 1214

Note: For further details on motor versions, please refer to the chapter motors and controls" in our main catalogue "Linear Technology".

Motor adaptor

- Simple assembly
- Exact fit due to centering shoulders

Material: Aluminium

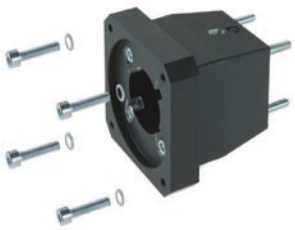

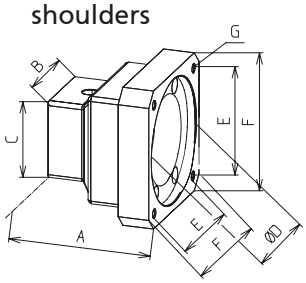

[mm]

Code No.	Type	A	B	C	D	E	F	G
949200	30	64	53.5	53.5	60	53	70	M5
949247	30	64	53.5	53.5	73	70	90	M6
949275	30	71	53.5	53.5	60	53	70	M5
949996	30	64	53.5	53.5	50	65	80	M5
949201	40	74	60	60	60	53	70	M5
949276	40	83	60	60	60	53	70	M5
949221	40	83	60	60	80	70,7	90	M6
949248	40	83	60	60	73	70	90	M6
949614	40	83	60	60	50	46	80	M5
949414	40	83	60	60	80	100	Ø120	Ø6.6

Motor adaptor for EHL

Linear unit connection

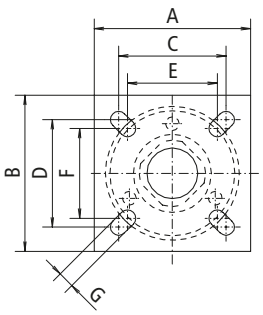

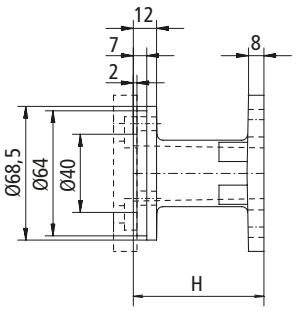

EHL connection

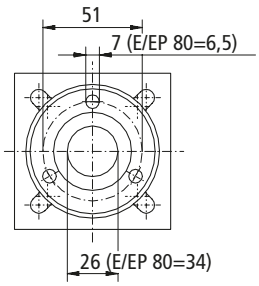

[mm]

Code No.	for linear unit	PinØ unit	A	B	C	D	E	F	G	H	L	Ø
92667	EP(X)-II 30	8	50	50	30	40	30	30	6	67	–	–
92668	EP(X)-II 40 EPX-II 40 KG	12	60	60	46	46	36	36	7	67	–	–

Motor adapter for LZ S/P - Drive

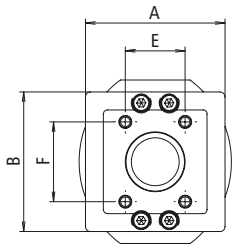

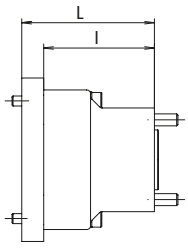

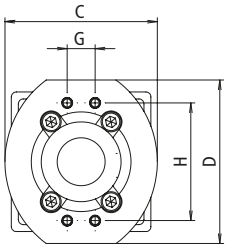

[mm]

Linear unit	LZ S Code No.	LZ P Code No.	Coupling Code No.	A	B	C	D	E	F	G	H	I	L
EP(X)-II 30	949711		9109200810	70	70	76.4	82	30	40	14	59	55.5	66.5
EP(X)-II 40 EPX-II 40 KG	949713		9114301012	70	70	76.4	82	46	46	52.3	52.3	73.5	81.5

Coupling

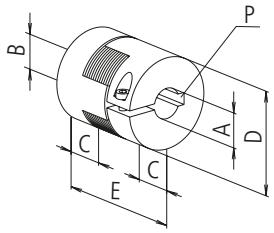

- Small size
- Shaft connection without backlash
- Maintenance-free
- Easy plug-in assembly

Material: Hub – aluminium
Gear ring – polyurethane

To ensure the smooth running of the coupling, a clearance of **D+3 mm** is required.

[mm]

Code No.	A	B	C	D	E	P	Torque [Nm]	
							with feather key	without feather key
9109200895	8	9,5	10	20	30	2x2 / –	5	3
9114300811	8	11	11	30	35	2x2 / 4x4	12	6
9114300816	8	16	11	30	35	2x2 / 5x5	12	6
9114309512	9,5	12	11	30	35	– / 4x4	12	6
9114301112	11	12	11	30	35	4x4 / 4x4	12	6
9114301212	12	12	11	30	35	4x4 / 4x4	12	6
9114301214	12	14	11	30	35	4x4 / 5x5	12	6
9114301216	12	16	11	30	35	4x4 / 5x5	12	6
9119400812	08	12	25	40	65	2x2 / 4x4	17	10

Further information for adaption and drives see catalogue linear technology, chapter motors and controls.

Positioning indicator

- Permitted ambient temperature +80° C
- Figure height 6 mm
- Reading accuracy ± 0.1 mm
- If positioning indicators are fitted, the linear units are delivered exclusively with ball bearings

Material: Housing polyamide 6 Orange RAL 2004,
Steel parts corrosion-protected

Scope of delivery: Positioning indicator, clamping ring, shaft extension and fastenings

Note: "rising" and "falling" versions refer to the clockwise rotation of the drive shaft.

Installation position: horizontal

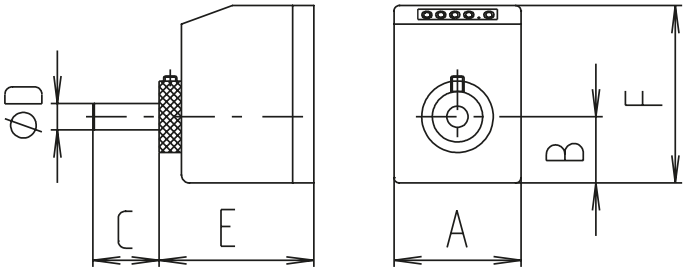

Installation position: vertical

[mm]

Type	Installation position	Code No.	Version	Code No.	Version*	A	B	C	D	E	F
30	Horizontal	91043	3 mm rising	91010	6 mm rising	48	25	18	8	59	67
30		91053	3 mm falling	91029	6 mm falling	48	25	18	8	59	67
30	Vertical	91063	3 mm rising	91020	6 mm rising	48	25	18	8	59	67
30		91073	3 mm falling	91019	6 mm falling	48	25	18	8	59	67
40	Horizontal	91004	4 mm rising	91030	8 mm rising	48	25	38	12	59	67
40		91014	4 mm falling	91039	8 mm falling	48	25	38	12	59	67
40	Vertical	91024	4 mm rising	91040	8 mm rising	48	25	38	12	59	67
40		91034	4 mm falling	91041	8 mm falling	48	25	38	12	59	67

* Version with double lead e.g. for installation on righthand/lefthand thread screws

Holder for inductive limit switch

- Limit switch can be moved and fixed axially

Type 30 – 40

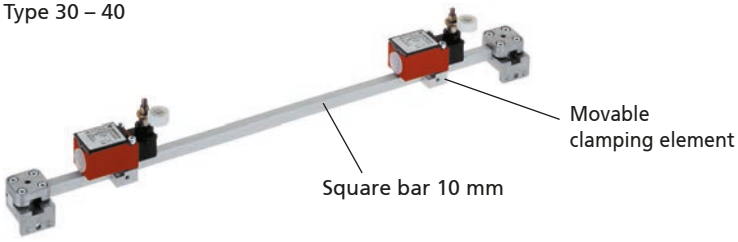

Type	30 – 40
Max. voltage	250 V AC
Max. switching current	6 A
Max. starting current	16 A
Lifetime	10 million switching cycles
Axis lever adjustment	locking at 10° increments
Protection rating	IP 65
Ambient temperature	-30°C to +80°C

Code No.	Type	Basic length	Version
92961_ _ _ _	30 – 40	245	with switch
92962_ _ _ _	30 – 40	245	without switch

Total length of linear unit

Mechanical limit switch

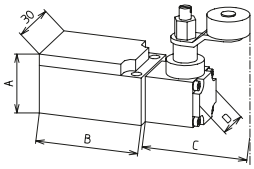

[mm]

Code No.	Type	Switching function	A	B	C	D
91905	30 – 40	NC contact / NO contact	26.5	45	45.5	21

- Limit switch can be moved and fixed axially

Type 30 – 40

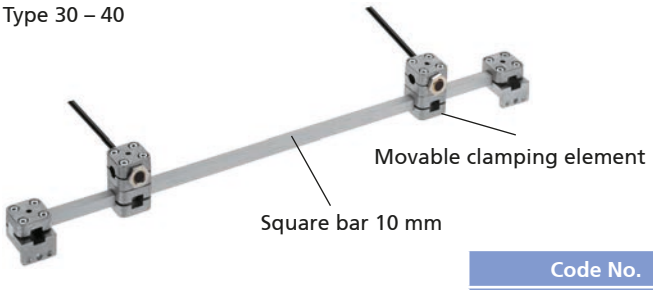

Type	30 – 40
Voltage	10 - 30 V DC
Max. switching current	200 mA
Operating distance	4 mm for steel
Protection rating	IP 67
Ambient temperature	-25°C to +70°C
Cable lengths	2m

Code No.	Type	Basic length	Version
92965_ _ _ _	30 – 40	125	without switch

Total length of linear unit

Inductive limit switch

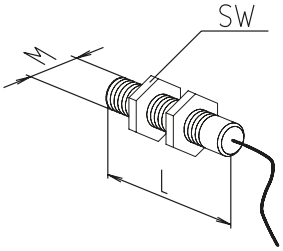

[mm]

Code No.	Type	Switching function	L	M	Wrench size (SW)
92825	30 – 40	Changeover	50	12x1	17

RK ROSE+KRIEGER

A Phoenix Mecano Company

RK Rose+Krieger GmbH
Connecting and positioning systems
Potsdamer Straße 9
32423 Minden, Germany
Telephon +49 571 9335-0
Telefax +49 571 9335-119
info@rk-online.de
www.rk-rose-krieger.com

Brochure PDF file
to download

EN 1000 Flyeralarm MAR 10 30 15 0003 03/2019 Printed in Germany